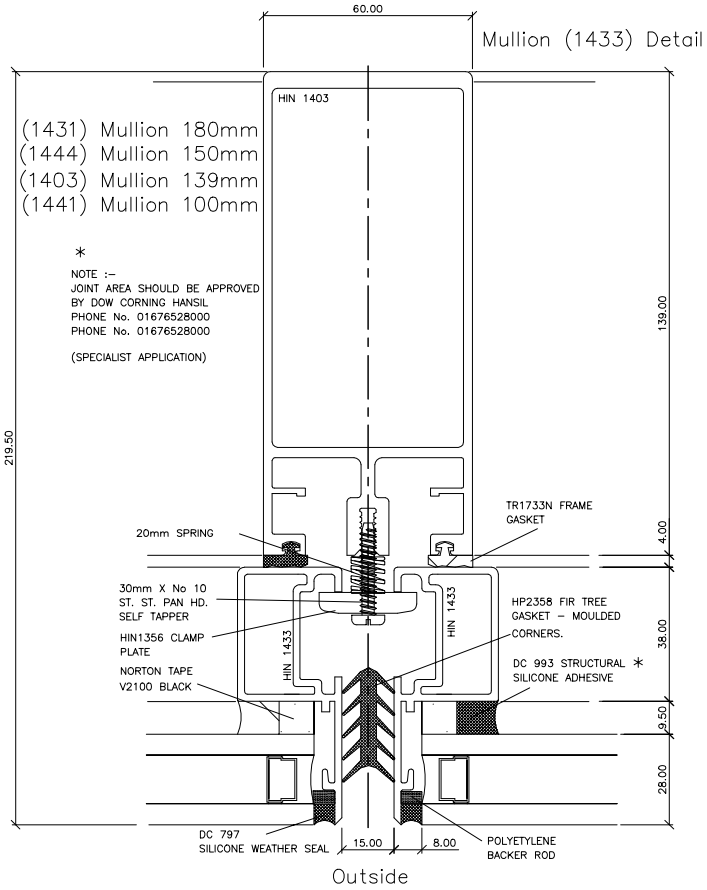

Transom Identification
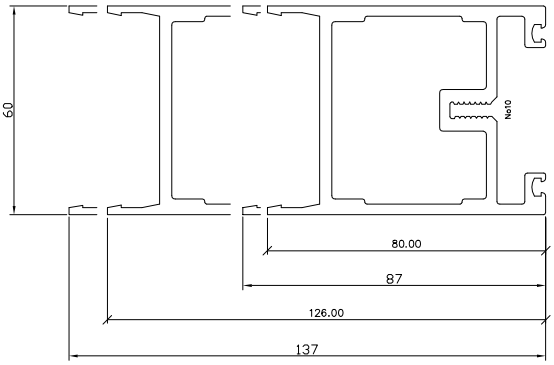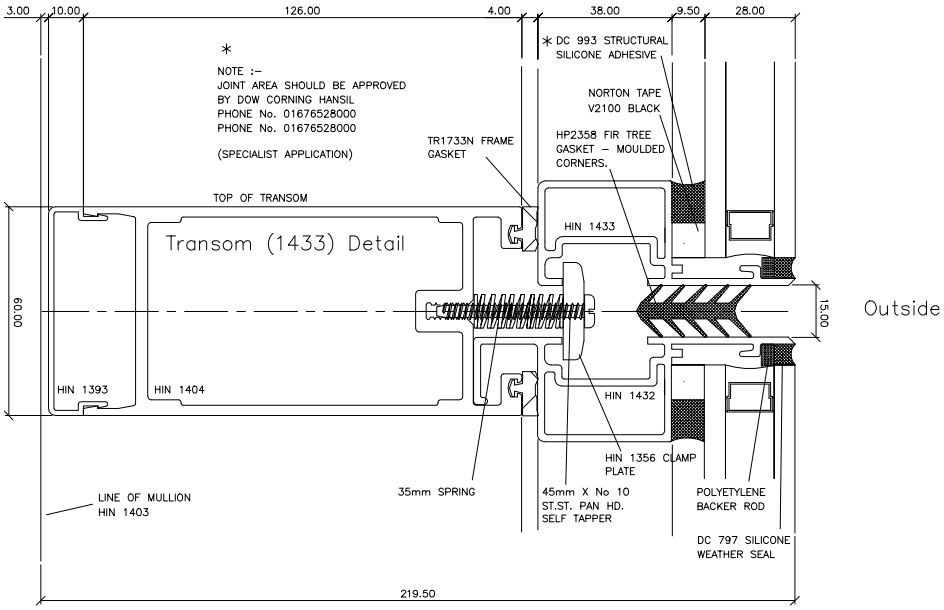
HIN1445	HIN1404	HIN1442	HIN1405
137mm TRANSOM	126mm TRANSOM	87mm TRANSOM	80mm TRANSOM
Ixx = 239.09 cm4	Ixx = 214.80 cm4	Ixx = 61.51 cm4	Ixx = 55.11 cm4
Iyy = 79.58 cm4	Iyy = 75.89 cm4	Iyy = 55.79 cm4	Iyy = 53.45 cm4